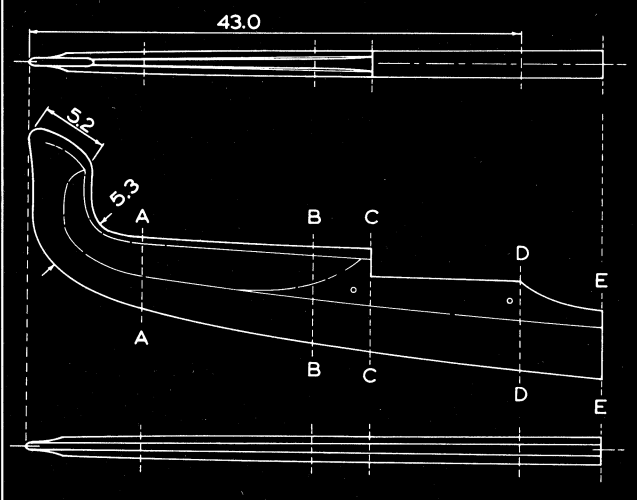

LOWER STEM PIECE 3

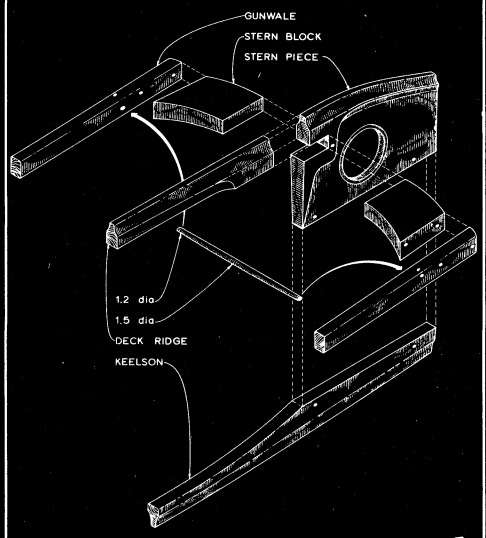

STERN CONSTRUCTION 5

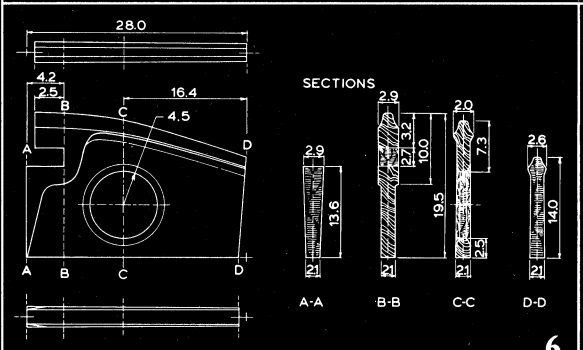

STERN PIECE 6

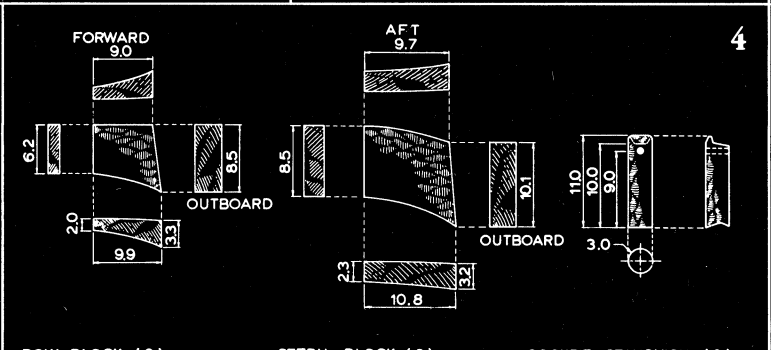

4

BOW BLOCK (2) STERN BLOCK (2) COCKPIT STANCHION (2)

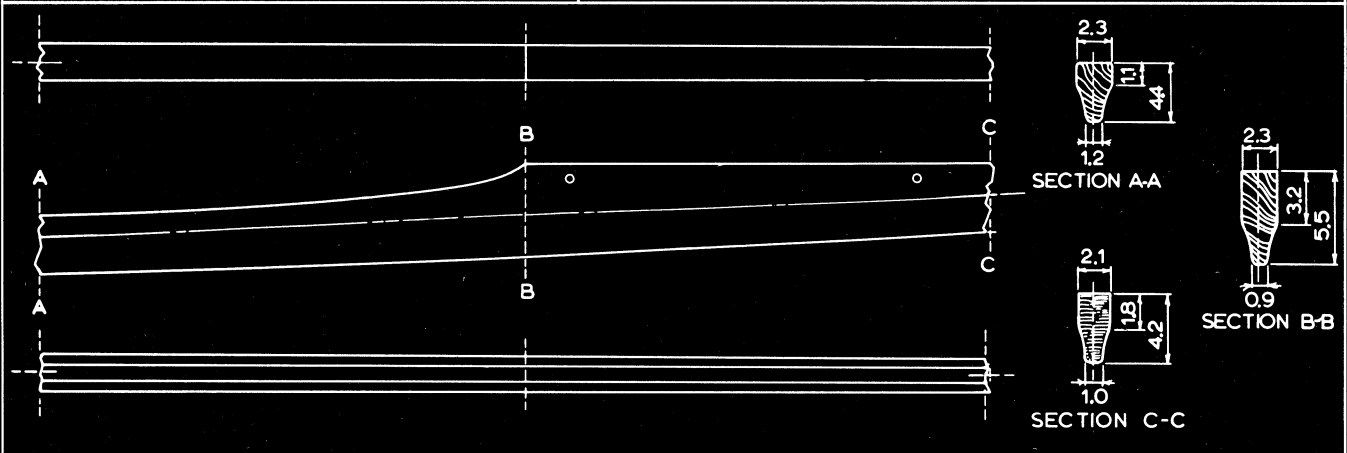

STERN KEELSON PIECE 7

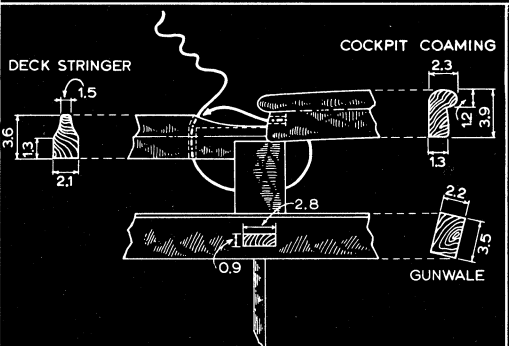

DECK BEAM / DECK STRINGER / COAMING LASHING 9

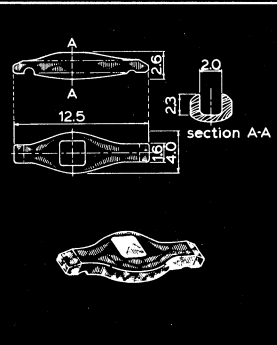

MAST STEP
located between ribs 11 and 12 10

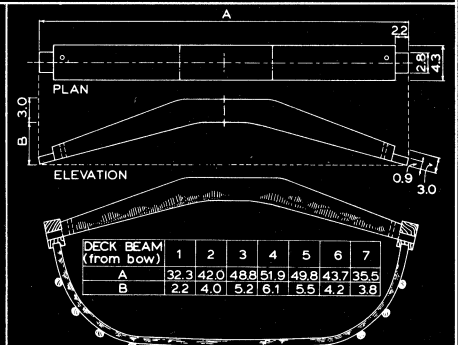

DECK BEAM (from bow)	1	2	3	4	5	6	7
A	32.3	42.0	48.8	51.9	49.8	43.7	35.5
B	2.2	4.0	5.2	6.1	5.5	4.2	3.8

DECK BEAMS 8